Lexmark CX820 Series

CX820de

High-performance workgroup printing and scanning plus professional-quality colour distinguish the Lexmark CX820, making it not just the quickest A4 format colour laser MFP in its class*, but the best value in features, supplies and service.

Colour | Solutions | Up to 50 ppm | 17.8 cm (7-inch) touch screen | Finishing option

Speed for productivity

Class-leading speed: The CX820 is the fastest A4 format MFP in its class*, with print speed of up to 50 ppm[3] and a maximum monthly duty cycle of 200,000 pages[5]. Even large colour print jobs complete quickly so users are more productive.

Quick-output specialist: The CX820 can print one colour page as fast as 7 seconds. In fact, it can often print short jobs before a user gets up from their chair, and minimises waiting time when printing is initiated from the touch screen.

Power printing: With a 1.3 GHz quad-core processor and 2 GB of standard memory, the CX820 has a powerful print controller to handle complex colour jobs with large, high-resolution photos and graphics spanning many pages. Its exclusive high-performance graphics chip drives real productivity.

Speedy scanning: Capture paper-based information quickly into your digital workflow or network applications. The CX820 scans at up to 114 sides per minute in duplex scan mode and up to 57 pages per minute in simplex scan mode. It uses single-pass duplex scan technology to scan both sides of a page simultaneously. This speed, in combination with the powerful processor, ensures that information is available when your users need it, so their processes are not slowed down or interrupted.

Advanced scanning technology: Thanks to Lexmark's advanced scanning technology, the CX820 offers:

- Automatic full-speed deskew to straighten scanned images. This eliminates the need for manual straightening of image files and saves time.
- Full-speed scanning of mixed originals to scan a stack of different-sized originals without slowing the scan speed.
- Page-level jam recovery to quickly resume a copy or scan job from where a jam or misfeed occurred.
- Standard MRC (Mixed Raster Content) image file compression technology to reduce scanned file sizes by approximately 50% with no image quality reduction.

Such advanced scanning technology supports accurate data capture using the included AccuRead Optical Character Recognition (OCR) software.

The optional Perceptive Capture software adds even more functionality to extract scanned information, organise it and share content with the people, business systems and processes that need it most, bringing order to chaos.

And the Lexmark VirtualReScan (VRS) integration option improves scanning productivity and capture efficiency by reducing the time involved in manual document preparation and automatically enhancing the quality of scanned images**.

*Class is defined as A4 colour laser MFPs priced between €3,000 and €4,000 as of November 2015. Comparison based on manufacturers' web price and published speed specifications as reported by Buyers Laboratory (BLI), as of November 2015.
**VirtualReScan integration via TotalAgility

16KD0654

This is an FCC Class A device. Not intended for use in residential or domestic environments.

Solutions to solve business problems

Lexmark's Embedded Solutions Framework TEST EDIT (eSF) and Cloud Solutions Framework (cSF)*allow the CX820 to load and run software solutions tailored to your specific need or industry.

Lexmark devices with cSF can run web apps designed for the device, accessed via the cloud or an on-premise server. eSF applications are created by Lexmark, its partners and customers, and loaded directly on the device.

The CX820 Series can also integrate with Kofax TotalAgility® from Lexmark, the market's first and only unified platform for the development and deployment of smart process applications. TotalAgility provides the essential connection between your systems of engagement and systems of record, making the information-intensive interactions you have with your customers smarter. TotalAgility dramatically transforms the business-critical First Mile™ of information-intensive customer interactions.

Solutions capabilities like that combine with Lexmark fleet management tools and your existing enterprise software and technical infrastructure to form the Lexmark smart MFP ecosystem. Its adaptability future-proofs your investment in Lexmark colour laser technology.

Included esF solutions

AccuRead OCR: Scanning plus optical character recognition turns paper documents into searchable PDFs or Rich Text Format to get documents out of a file cabinet and into a searchable database. Eliminate post-scan OCR processing with desktop- or server-based software by processing data directly at the device.

Scan Center: Scan a paper document once and route the digital image file to multiple destinations simultaneously: email addresses, network folders, FTP sites, fax machines, electronic document archives or other secure network locations, plus optional delivery confirmation.

Forms and Favourites: Eliminate waste and inaccuracy associated with preprinted forms and other documents by locating and selecting forms from network storage locations or content management applications right from the CX820's touch screen. With the Forms and Favourites solution, you can print Microsoft® Office documents directly from the device*, as well as PDF, XPS, JPG, PRN, TIFF and other file formats—useful when you're on the road or don't have a typical office computer to print from.

Card Copy: Save time and effort in copying identification cards, licenses and insurance cards by automatically scanning, enlarging and printing both sides of a two-sided card onto one side of a sheet of paper.

Professional colour

Accurate colour: The CX820 provides both PANTONE®calibration and embedded colour sample pages to help you nail perfect colour at the design stage. Lexmark Colour Replacement technology combines spot colour replacement and RGB replacement for precision matching of critical colours such as those found in corporate logos. It's colour so accurate, you can do everything in-house.

Ultra-sharp quality: The CX820 provides Lexmark's ultra-sharp 4800 Colour Quality (4800 CQ) at the default 50 ppm print speed.

Best-in-class scanning: The CX820 scanner is capable of 1200 dpi optical resolution** for crisp, accurate scans. It uses high-quality CCD (Charged Coupled Device) sensors and a sophisticated five-piece optical glass lens to capture very high resolution details along with a widened colour space.

A deep field of focus and very low distortion (maintained even at 114 sides per minute) help scans of colour-critical documents to maintain both colour accuracy and information accuracy, ensuring that whatever data is on the scanned document gets moved into your workflow applications without errors.

*Available Summer 2016
**1200 dpi scanning requires TWAIN driver

Advanced media handling

High input capacity: The most advanced media handling capabilities of any A4 laser MFP means a maximum input capacity of up to 4500 sheets. Higher input capacity reduces the chance that paper runs out, holding up print jobs until someone reloads.

Staple of business: The CX820 series offers a configuration that includes a compact, in-line staple finisher. Automatic stapling saves time when producing bound documents by eliminating the need to separate and manually staple groups of pages.

Media choices: The CX820 supports a broad media weight range, from 300 gsm—often used for signage and book covers—to tissue-thin paper such as 70 gsm. You can also use vinyl, labels, cardstock, envelopes and banners, with no media thickness worries.

Flexible ADF scanning: The automatic document feeder can scan heavy media up to 120 gsm and very light tissue media down to 52 gsm. Scan sizes as small as 7.6x12.7 cm (3x5-inch) index cards and as long as 63.5 cm (25 inches), as well as carbon paper and dot matrix media with sprocket holes. The ADF will even feed and scan folded and torn documents.

Toner and long-life components

Toner for the long haul: High Yield replacement toner cartridges produce up to 33,000 black and up to 17,000 colour[1] pages to reduce the number of times toner runs out, keeping the output going strong in high-usage environments.

Long-life components: Constantly replacing components creates unnecessary waste and carbon emissions and hurts productivity as the MFP stops and print jobs back up. The CX820's long-life components minimise downtime with imaging components that can last up to 300,000 pages.[4]

Quality in Unison: Unison™ Toner is the result of advanced toner science—powerful enough to deliver consistently outstanding image quality with rich, vibrant colour and precise details, plus long-life system reliability and amazing sustainability. Documents printed with Unison Toner look great from the first page to the last because of its uniquely engineered formulation. Even when the cartridge is low, there's no fading and no need to shake the cartridge, and you won't waste money by replacing a cartridge that still has toner in it.

Unison Toner's unique low-friction qualities increase toner flow and contribute to its ability to transfer efficiently to the page. Unison Toner reduces internal wear on long-life components and protects the print system. This delivers long-term reliability and ultimately saves time, money and the environment.

Unison Toner is uniquely tuned to the CX820's print system for optimal performance.

Smart MFP ecosystem

Bridge paper and digital—unstructured and structured—information with devices and connections that drive your business forward.

In an ecosystem, things work in concert to ensure efficient processes. In the business environment, people, technology and information also form an ecosystem, where information exists in both structured and unstructured forms. And the center of this ecosystem is the smart MFP, the connection point between digital and printed information.

The Lexmark smart MFP ecosystem brings together the hardware, software, tools and services to help drive your business forward.

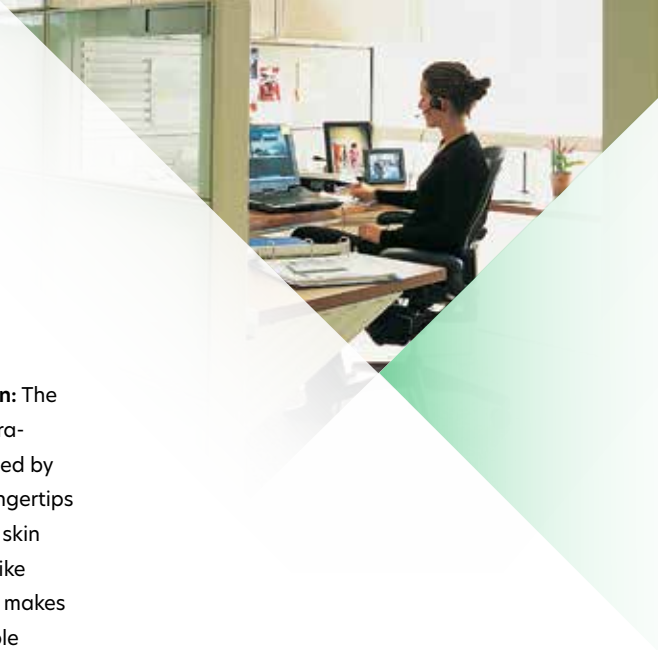

Security and more

Advanced security features: Lexmark CX820 security features encompass device management, hardening and operation.

Device management: A combination of administrative access and passwords, HTTPS, SMNPv3, IPsec and 802.1x support lets you remotely monitor, manage, authorise and authenticate who and what gets access to the network.

Device hardening: Built-in tools include port filtering and TCP connection filtering which restrict what connections are active from what sources. Encryption and wiping of the hard disk protect sensitive print job data. Digitally signed firmware updates can prevent hackers from uploading compromised software to the MFP.

Device operation: You get user authentication via PIN, passwords or badge reader, address book lookup via LDAP over SSL (Secure Socket Layer) to provide a secure connection between the MFP and the network, and device operator panel lockouts to protect the device settings.

Hard disk protection: The hard disk is protected with 256-bit AES encryption and encryption keys stored in the MFP's memory, not the hard disk. The data is protected even if the hard drive is removed. This level of protection is automatic at power up—users and administrators do not have to do anything.

The CX820 also performs automatic file-based hard disk wiping after every print job, which cannot be disabled. And the process of clearing a device's disk drive and non-volatile memory data when removing it from service or a secure location is simple with a one-step "out of service" wiping command for authorised users.

Take it easy

17.8 cm (7-inch) colour touch screen: The bright touch screen features an ultra-smooth surface and can be activated by almost anything, including pens, fingertips or nails—without pressure or direct skin contact. And support for gestures like swipe to access panels and menus makes operation easy and intuitive. Audible feedback from the screen provides user assurance, while a separate 10-key number pad improves accessibility and enhances convenience.

Intuitive interface: The e-Task interface with modern tablet-like capabilities is familiar to users, minimising the need for training. On-screen features like print preview and late job customisation allow users to select specific pages within a document and change print job settings such as staple or duplex at the device.

Wireless and mobile printing: Lexmark Print Management was the first AirPrint®-certified enterprise print management solution. Lexmark mobile printing includes support for iOS, Android, and Microsoft® Windows Mobile printing, with optional wireless and NFC direct connectivity from smartphones and tablets. The CX820 is a Mopria®-certified printer and is Google Cloud Print™ Ready.

Accessibility: The CX820 includes advanced Section 508* and European Standard EN 301 549 accessibility features for those with varying levels of ability. Features such as an operator panel that tilts from almost horizontal to almost vertical, paper trays that can be closed with less than five pounds of force, standard headphone jack and standard talk-back feature provide a better user experience for all of our customers.

Lexmark Sustainability

For Lexmark, commitment to the environment isn't a marketing tagline, it's a core value backed up by real action and results. We are forward thinking, innovative, and driven to sustain a healthy planet for generations to come. For our customers and partners we bring this passion, our leading technology and a deep understanding of industry-specific business processes to continuously improve their efficiency as well as our own.

For more information on Lexmark's sustainability initiatives, visit csr.lexmark.com.

*Available Summer 2016

Direct printing: Directly print Microsoft Office files, PDFs and other document and image types from flash drives, network servers or online drives.

Auto size sensing: The flatbed scanner of the CX820 includes an auto size sensing feature which allows the scanner to detect the dimensions of originals and automatically adjust the scan area. This provides faster scan performance and smaller files sizes.

Multifeed detection: The CX820 also includes ultrasonic multifeed detection to provide assurance that your documents will be accurately and dependably scanned for archiving or integration into your digital workflow. If the auto document feeder (ADF) inadvertently feeds two sheets at a time, the MFP detects it and pauses scanning until the user can separate the sheets.

Built for planet earth

Advanced toner: Lexmark's exclusive Unison Toner makes energy savings a reality, using less energy than Lexmark's previous toners by printing at a lower temperature. And through LCCP, the Lexmark Cartridge Collection Program, Lexmark offers a free and easy way for you to return empty cartridges for sustainable recycling and remanufacturing.

Power saving modes: Sleep mode power usage of less than 3.5 watts saves money and energy between print jobs. When the device is not in use, it goes to sleep and wakes for incoming print jobs. In addition, it can be powered on or off from its control panel or a user-defined schedule. And low power-mode sensors wake the MFP when paper is placed in the ADF or the scanner lid is opened.

Paper and toner savings: Standard duplex printing prints on both sides of paper by default. Plus, the unique ColorSaver feature prints images at a lighter shade by default, while leaving text dark and readable, saving toner and money.

And the included Eco-Copy solution lets you print copies of scanned items using predefined settings like duplex, pages per sheet and copies per sheet to further save paper.

Recycled paper compatibility: To ensure that you can go as green as you need to, the Lexmark CX820 Series has been fully tested with a range of recycled papers, up to 100% recycled.

Environmental certifications: Lexmark products meet globally recognised environmental standards*.

- ENERGY STAR®
- Blue Angel
- EPEAT® Gold

Lexmark Managed Print Services (MPS)

Lexmark Managed Print Services (MPS) takes a holistic approach to improving the enterprise print architecture. Lexmark aligns devices with the business mission and takes care of their day-to-day management with proactive and predictive service to ensure optimal uptime. Once in place, the managed environment becomes a conduit to unify print and digital information for streamlined processes. Customers benefit with fewer devices, fewer pages, lower cost and improved knowledge worker productivity.

*Energy Star V2.0 for Imaging Equipment (EU RoHS and Section 4.3.1.1 of IEEE 1680.2-2)

16KD0654

1. **Intuitive colour touch screen with next-generation e-Task interface**
   The large 17.8 cm (7-inch) colour touch screen features an ultra-smooth surface and can be activated by almost anything, including pens, fingertips or nails—without pressure or direct skin contact. The modern interface is familiar to users, minimising the need for training.

2. **Advanced scanner with duplex automatic document feeder (DADF)**
   Save time by scanning both sides of your document in one pass with robust colour scanning capabilities and an input capacity of up to 150 sheets.

3. **Expandable input**
   Print on multiple paper types and boost input capacity to 4,500 sheets.

4. **Optional staple finisher**
   The optional compact, in-line staple finisher saves time when producing bound documents.

5. **Unison Toner print system with long-life supplies**
   Unison Toner delivers consistently outstanding image quality plus long-life system reliability and amazing sustainability in an innovative no-shake design. High Yield replacement toner cartridges produce up to 33,000 black and up to 17,000 colour pages.[1]

6. **Software solutions**
   Combine eSF capabilities with Lexmark fleet management tools, TotalAgilityapplications, and your existing enterprise software and technical infrastructure to form the Lexmark smart MFP ecosystem. Its adaptability future-proofs your investment in Lexmark colour laser technology.

7. **Direct printing**
   Print Microsoft Office files, PDFs and other document and image types from flash drives, or select and print documents from network servers or online drives.

Product specifications	Lexmark CX820de	Lexmark CX820dtfe
Print		
Display	Lexmark e-Task 17.8 cm (7-inch) colour touch screen	
Print Speed: Up to[3]	Black: 50 ppm / Colour: 50 ppm	
Time to First Page: As fast as	Black: 7 seconds / Colour: 7 seconds	
Print Resolution	Black: 1200 x 1200 dpi, 4800 Colour Quality (2400 x 600 dpi) / Colour: 1200 x 1200 dpi, 4800 Colour Quality (2400 x 600 dpi)	
Memory	Standard: 2048 MB / Maximum: 4096 MB	
Hard Disk	Included in configuration	
Recommended Monthly Page Volume[7]	2500 - 25000 pages	
Maximum Monthly Duty Cycle: Up to[5]	200000 pages per month	
Copy		
Copy Speed: Up to[3]	Black: 50 cpm / Colour: 50 cpm	
Time to First Copy: as fast as	Black: 6.5 seconds / Colour: 7.5 seconds	
Scan		
Scanner Type / ADF Scan	Flatbed scanner with ADF / DADF (single pass Duplex)	
A4/Ltr Duplex Scan Speed: Up to	Black: 114 / 120 sides per minute / Colour: 114 / 120 sides per minute	
A4/Ltr Simplex Scan Speed: Up to	Black: 57 / 60 sides per minute / Colour: 57 / 60 sides per minute	
Fax		
Modem Speed	ITU T.30, V.34 Half-Duplex, 33.6 Kbps	
Supplies[2]		
Laser Cartridge Yields (up to)[1]	33,000-page Black Extra High Yield Cartridge, 17,000-page Colour (CMY) High Yield Cartridges, 8,000-page Black and Colour (CMYK) Cartridges	
Photoconductor Estimated Yield: Up to[4]	175000 pages, based on 3 average letter/A4-size pages per print job and ~ 5% coverage	
Developer Unit(s) Estimated Yield: Up to[4]	300000 pages, based on 3 average letter/A4-size pages per print job and ~ 5% coverage	
Cartridge(s) Shipping with Product[1]	8,000-page Black and Colour (CMYK) Return Program Toner Cartridges	
Paper Handling		
Included Paper Handling	550-Sheet Input, 100-Sheet Multipurpose Feeder, Integrated Duplex, 300-Sheet Output Bin	550-Sheet Input, 100-Sheet Multipurpose Feeder, Integrated Duplex, 2 x 550-Sheet Tray, Inline Stapler, 300-Sheet Output Bin
Optional Paper Handling	550-Sheet Tray, Inline Stapler, 2200-Sheet Tray	550-Sheet Tray, 2200-Sheet Tray
Paper Input Capacity: Up to	Standard: 650 pages 75 gsm bond / Maximum: 4500 pages 75 gsm bond	Standard: 1750 pages 75 gsm bond / Maximum: 4500 pages 75 gsm bond
Paper Output Capacity: Up to	Standard: 300 pages 75 gsm bond / Maximum: 300 pages 75 gsm bond	
Media Types Supported	Card Stock, Dual Web Labels, Envelopes, Labels, Plain Paper, Polyester Labels, Vinyl Labels, Refer to the Card Stock & Label Guide., Banner Paper	Card Stock, Dual Web Labels, Envelopes, Labels, Plain Paper, Polyester Labels, Vinyl Labels, Refer to the Card Stock & Label Guide.
Media Sizes Supported	10 Envelope, 7 3/4 Envelope, 9 Envelope, A4, A5, B5 Envelope, C4 Envelope, C5 Envelope, DL Envelope, Index Card, Executive, Folio, JIS-B5, Legal, Letter, 4 x 6", Statement, Universal, Oficio, A6	
General Information[6]		
Standard Connectivity	One Internal Card Slot, USB 2.0 Specification Hi-Speed Certified (Type B), Gigabit Ethernet (10/100/1000), Two Rear USB 2.0 Specification Hi-Speed Certified ports (Type A), Two Front USB 2.0 Specification Hi-Speed Certified port (Type A)	
Optional Network Ports	Internal MarkNet N8360 802.11b/g/n Wireless, NFC	
Noise Level: Operating	Print: 55 dBA / Copy: 58 dBA / Scan: 55 dBA	
Specified Operating Environment	Humidity: 15 to 80% Relative Humidity, Temperature: 10 to 32°C, Altitude: 0 - 2896 Meters (9,500 Feet)	
Product Guarantee	1-Year Onsite Service	
Size (mm - H x W x D) / Weight	763 x 559 x 588 mm / 82.3 kg	1137.4 x 649 x 588 mm / 134.7 kg

[1]Average continuous black or continuous composite CMY declared cartridge yield up to this number of standard pages in accordance with ISO/IEC 19798. [2]Product functions only with replacement cartridges designed for use in a specific geographical region. See www.lexmark.com/regions for more details. [3]Print and copy speeds measured in accordance with ISO/IEC 24734 and ISO/IEC 24735 respectively (ESAT). For more information see: www.lexmark.com/ISOspeeds. [4]Actual Yield may vary based on other factors such as device speed, paper size and feed orientation, toner coverage, tray source, percentage of black-only printing and average print job complexity. [5]"Maximum Monthly Duty Cycle" is defined as the maximum number of pages a device could deliver in a month using a multishift operation. This metric provides a comparison of robustness in relation to other Lexmark printers and MFPs. [6]Printers are sold subject to certain license/agreement conditions. See www.lexmark.com/printerlicense for details. [7]"Recommended Monthly Page Volume" is a range of pages that helps customers evaluate Lexmark's product offerings based on the average number of pages customers plan to print on the device each month. Lexmark recommends that the number of pages per month be within the stated range for optimum device performance, based on factors including: supplies replacement intervals, paper loading intervals, speed, and typical customer usage.

This is a Class A device according to the FCC Rules and EN 55022/EN 55032 emissions standards. This device is not intended for use in residential or domestic environments due to potential interference to radio communications.

16KD0654

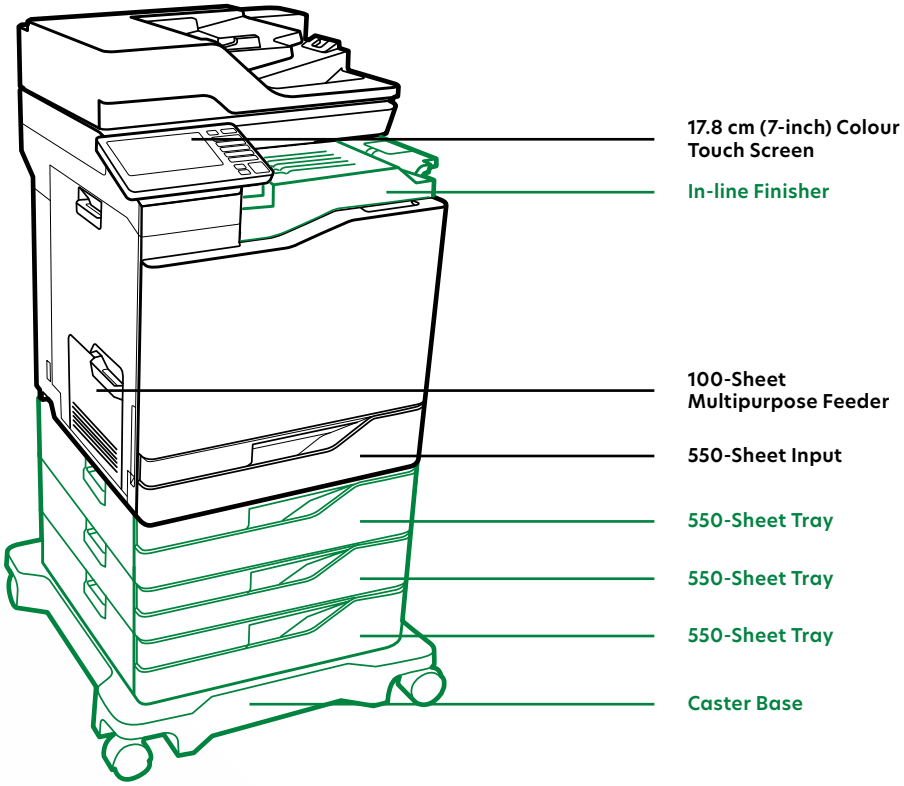

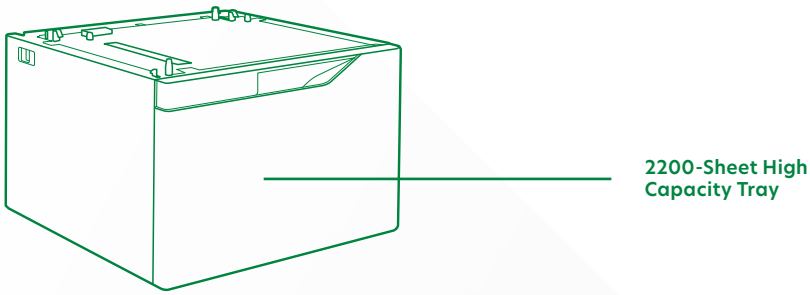

Standard

Optional

The line art features the standard set-up that can be different per model.

© 2015 Lexmark and the Lexmark logo are trademarks of Lexmark International, Inc., registered in the United States and/or other countries. All other trademarks are the property of their respective owners.

Unison™ is a U.S. registered trademark.

AirPrint and the AirPrint logo are trademarks of Apple Inc.

ENERGY STAR® is a U.S. registered mark.

EPEAT® is a trademark of EPEAT, Inc. in the United States and other countries.

Google Cloud Print™ is a trademark of Google Inc.

Mopria®, the Mopria® Logo and the Mopria® Alliance logo are registered trademarks and service marks of Mopria Alliance , Inc. in the United States and other countries. Unauthorized use is strictly prohibited.

Notice: "This product includes software developed by the OpenSSL Project for use in the OpenSSL Toolkit (http://www.openssl.org/)."

lexmark.com

16KD0654